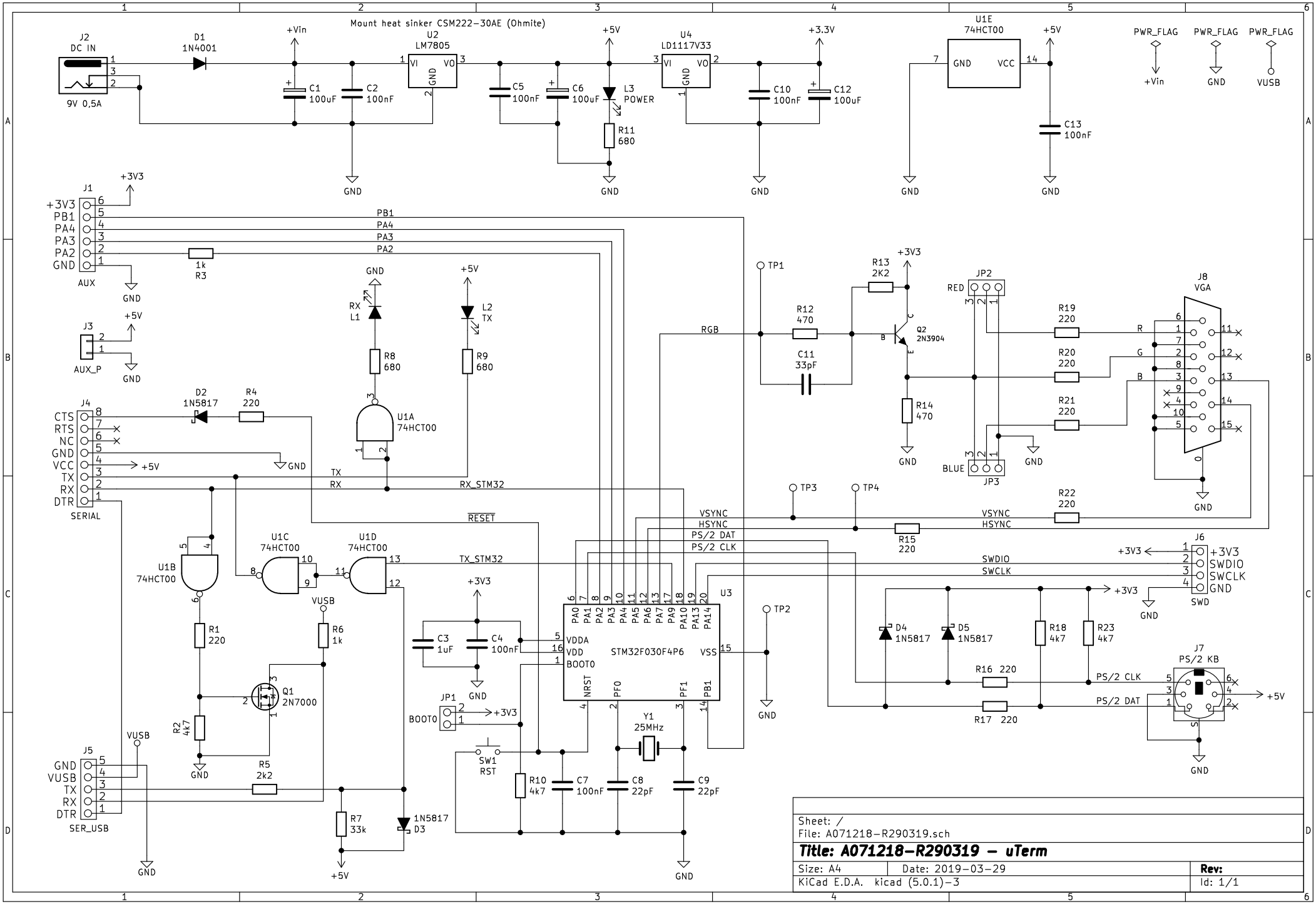

Sheet: /
File: A071218-R290319.sch

Title: A071218-R290319 - uTerm

Size: A4	Date: 2019-03-29	Rev:
KiCad E.D.A. kicad (5.0.1)-3		Id: 1/1